KAVANGO EAST REGIONAL COUNCIL

Request for Quotations for Works

"CONSTRUCTION OF VENTILATED IMPROVED PIT LATRINE (VIP) TOILETS IN NDONGA-LINENA CONSTITUENCY – KAVANGO EAST REGION"

Procurement Reference No: **W/RFQ/KERC-RS/26/2025-2026**

Closing Date & Time:19 March 2026 @11H00am

Name of Bidder: _____

Contact Number of Bidder: _____

E-mail Address of Bidder: _____

Authorized Representative: _____

Bid Amount: N$_____
(From Summary Bill of Quantities, Inclusive of VAT)

The head of;
Procurement Management Unit
Kavango East Regional Council
E-mail: jkangumber@kavangorc.gov.na
Private Bag 2124, Rundu

Tel: +264 66 266 000
Fax: +264 65 240 453

KAVANGO EAST REGIONAL COUNCIL

Tel: +264 66 266 000
Fax: +264 66 255 396
Email:jnnnnghidileko@gmail.com

Private Bag 2124
Rundu

Letter of Invitation

Dear Prospective bidders

Request for Quotation for the Construction of Ventilated Improved Pit Latrine (VIP) Toilets in Ndonga-Linena Constituency – Kavango East Region

The Kavango East Regional Council invites you to submit your best quote for the works described in detail hereunder.

Any resulting contract shall be subject to the terms and conditions referred to in the document.

Queries, if any, should be addressed to Kavango East Regional Council, **Mr *Haimbili P***, Tel: +264 66 266 000, for administrative issues and **Mr N. Jonas**; Cell: 081 643 8313, Tel: +264 66 266 000 on technical issues.

Please prepare and submit your quotation in accordance with the instructions given or inform the undersigned if you will not be submitting a quotation.

Yours faithfully,

26/02/2026

Mr. J M Kangumbe
Chairperson of Procurement Management Unit
Kavango East Regional Council

KAVANGO EAST REGIONAL COUNCIL
Procurement Management Unit
HEAD
26 FEB 2026
PRIVATE BAG 2124, RUNDU

BIDDING DOCUMENT

TABLE OF CONTENTS

Section I: Instructions to bidders 4

Section II: Quotation Letter 7

Section III: Statement of Requirements 9

A. Scope of works, specifications and performance requirements 9

SECTION IV: PRICED ACTIVITY SCHEDULE 10

Section V: Specification and Compliance Sheet 13

Section VI: General Conditions Of Contract And Contract Agreement 14

Section VIII SPECIAL Conditions Of Contract 14

Annexures: 18

SECTION I: INSTRUCTIONS TO BIDDERS

NB: Section 66(1)(b) of the Public Procurement Act 15 of 2015 will apply. "A staff member of the Board or public entity involved in planning or conducting procurement process or contract administration must undertake – to act in the public interest and in accordance with this Act."

1. **Rights of Public Entity**

   The Kavango East Regional Council reserves the right:

   (a) To split the contract as per the lowest evaluated cost per item, or

   (b) To accept or reject any quotation or to cancel the quotation process and reject all quotations at any time prior to contract award.

2. **Preparation of Quotations**

   You are requested to quote for the works mentioned in Section III by completing, signing and returning:

   (a) the Quotation Letter in Section II with its annex for Bid Securing Declaration; and

   (b) the Priced Activity Schedule Section IV;

   (c) the Specifications and Compliance Sheet in Section V; and

   (d) any other attachment as deemed appropriate

   You are advised to carefully read the complete Request for Sealed Quotations document, including the Special Conditions of Contract in Section VII, before preparing your quotation. The standard forms in this document may be retyped for completion but the Bidder is responsible for their accurate reproduction.

3. **Validity of Quotations**

   The quotation validity period shall be *180* days from the date of bid submission deadline.

4. **Eligibility Criteria**

   To be eligible to participate in this Quotation exercise, you should:

   (a) Have a valid certified copy of Company Registration Certificate;
   (b) Have an original valid or certified copy of Good Standing Tax Certificate;
   (c) Have an original valid or certified copy of Good Standing Social Security Certificate;
   (d) Have a valid certified copy of Good Standing Certificate from BIPA
   (e) Have a valid certified copy of Affirmative Action Compliance Certificate, proof from Employment Equity Commissioner that the bidder is not a relevant employer, or exemption issued in terms of Section 42 of the Affirmative Act, 1998;
   (f) Have a certified copy of SME Certificate
   (g) Submit a signed Bid Securing Declaration
   (h) Attach at least Two (2) Practical Completion Certificate for previous experience in construction
   (i) Business Principle must be in line with this procurement
   (j) Attach Certified Identity Document (s) of the Company Owner (s)

(k) Submit work Program indicating **duration and deliverable**

(l) Additional requiments

(a)Document to be filled completed with black ink

(b) All pages of the bidding document must be initialled.
(c) All correction must be initialled.
(d) No eraser (Tippex) to be used.
(e) No correction to the original Bill of Quantities is allowed.
(f) Use of Government envelop will lead to disqualification.

(g) Submit complete signed and stamped **Bid-securing Declaration**;

5. Bid Securing Declaration

Bidders are required to subscribe to a Bid Securing Declaration for this procurement process.

6. Works Completion Period

The completion period for works shall be ***90 days*** after acceptance and issue of Purchase Order. Deviation in completion period shall be considered if such deviation is reasonable.

7. Sealing and Marking of Quotations

Quotations should be sealed in a single envelope, clearly marked with the ***Procurement Reference Number***, addressed to ***Kavango East Regional Council*** with the ***Bidder's name*** and ***contact information*** at the back of the envelope.

8. Submission of Quotations

Quotations should be deposited in the Quotation/ Bid Box located at ***Kavango East Regional Council, Maria Mwengere Street, Rundu, at Office number 11.*** Not later than ***19 March 2026 at 11h00am.*** Late quotation will be rejected.

9. Opening of Quotations

Quotations will be opened internally by the Public Entity after the closing time referred to in instruction 8 above. A record of the Quotation Opening stating the name of the bidders, the amount quoted, the presence or absence of a Bid Securing Declaration, will be posted on the website of the Kavango East Regional Council.

10. Evaluation of Quotations

The Public Entity shall have the right to request for clarifications in writing during evaluation. Offers that are substantially responsive shall be compared on the basis of price or ownership cost, subject to Margin of Preference where applicable, to determine the lowest evaluated quotation.

11. Technical Compliance

The Specifications and Compliance Sheet details the minimum specifications of the works to be carried out. The specifications have to be met, but no credit will be given for exceeding the specifications.

12. Prices and Currency of Payment

Prices shall be fixed in Namibian Dollars. Quotations shall cover all costs of labour, materials, equipment, overheads, profits, and all associated costs for performing the works, and shall include all duties. The whole cost of performing the works shall be in the items stated, and the cost of any incidental works shall be deemed to be included in the prices quoted.

13. Margin of Preference

Bidders Preference will be given to bidders whose total bid price falls within ±5% of the budgeted cost estimate.

14. Award of Contract

The Bidder having submitted the lowest evaluated responsive quotation and qualified to perform the works shall be selected for award of contract. Award of contract shall be by issue of a *Purchase Order/Letter of Acceptance* in accordance with terms and conditions contained in *Section VI: Contract Agreement and General Conditions of Contract*.

15. Notification of Award and Debriefing

The Public Entity shall after award of contract promptly inform all unsuccessful bidders in writing of the name and address of the successful bidder and the contract amount and post a notice of award on its website within 7 days. Furthermore, the Public Entity shall attend to all requests for debriefing made in writing within 7 days of the unsuccessful bidders being informed of the award.

SECTION II: QUOTATION LETTER

(To be completed by Bidders)

[Complete this form with all the requested details and submit it as the first page of your quotation with the Price list and documents requested above. A signature and authorisation on this form will confirm that the terms and conditions of the RFQ prevail over any attachments. ***If your quotation is not authorised, it will be rejected.****]*

Quotation addressed to*: [name of Public Entity]*	
Procurement Reference Number:	
Subject matter of Procurement:	

We offer to execute Works detailed in the Statement of Requirements, in accordance with the terms and conditions stated in your Request for Quotations referenced above.

We confirm that we are eligible to participate in this Quotation exercise and meet the eligibility criteria specified in Section 1: Instruction to Bidders. We further understand that this subscription could lead disqualification on the grounds mentioned in the BDS.

We undertake to abide ethical conduct during the procurement process and the execution of any resulting contract.

We have read and understood the content of the Bid Security/Bid Securing Declaration (BSD) attached hereto and subscribe fully to the terms and conditions contained therein. We further understand that this subscription could lead to disqualification on the grounds mentioned in the BSD.

The validity period of the Quotation is _____ days from the date of the bid submission deadline.

We confirm that the prices quoted in the Priced Activity Schedule are fixed and firm and will not be subject to revision or variation, if we are awarded the contract **prior to the expiry** date of the quotation validity.

Works will commence within _____ days from date of issue of Purchase Order/ Letter of Acceptance.

Works will be completed within _____ from date of issue of Purchase Order/ Letter of Acceptance.

Quotation Authorised by:

Name of Bidder		Company's Address and seal	
Contact Person			
Name of Person Authorising the Quotation:		Position:	Signature:
Date		Phone No./Fax	

Appendix to Quotation Letter

BID SECURING DECLARATION
(Section 45 of Act)
(Regulation 37(1) (b) and 37(5))

Procurement Ref No.: ***W/RFQ/KERC-RS/26/2025-2026***

To: Kavango East Regional Council

I/We* understand that in terms of section 45 of the Act a public entity must include in the bidding document the requirement for a declaration as an alternative form of bid security.

I/We* accept that under section 45 of the Act, I/we* may be suspended or disqualified in the event of

(a) **a modification or withdrawal of a bid after the deadline for submission of bids during the period of validity;**

(b) **refusal by a bidder to accept a correction of an error appearing on the face of a bid;**

(c) **failure to sign a procurement contract in accordance with the terms and conditions set forth in the bidding document, should I/We* be successful bidder; or**

(d) **Failure to provide security for the performance of the procurement contract if required to do so by the bidding document.**

I/We* understand this bid securing declaration ceases to be valid if I am/we are* not the successful Bidder

Signed: _____

Capacity of: _____

Name: _____

Duly authorized to sign the bid for and on behalf of: [insert complete name of Bidder]

Dated on _____ day of _____, _____

Corporate Seal/ Stamp (where appropriate)

SECTION III: STATEMENT OF REQUIREMENTS

SCOPE OF WORKS, SPECIFICATIONS AND PERFORMANCE REQUIREMENTS

SCOPE OF WORKS

Construction of VIP toilets in Ndonga-Linena Constituency – Kavango East Region (2025-2026 FY)

CONSTITUENCY	VILLAGE	QUANTITY
Ndonga-Linena	1. Ndonga-Linena Modern Village	6
	2. Karukuta	6
	3. Guma	7
		Total: 19

See attached annexures:

1) Drawing. Plan A - 001 FLOOR PLAN
2) Drawing Plan A - 002 STRUCTURE VIEW
3) . Drawing. Plan A – 002 ELEVATIONS
4) Drawing Plan S - 001 SECTION DETAILS
5) Drawing. Plan S - 002 STRUCTURE DETAILS
6) 2.5 3D View

SECTION IV: PRICED ACTIVITY SCHEDULE

SECTION IV: PRICED ACTIVITY SCHEDULE: VIP PIT LATRINE FOR THE RURAL SERVICES. KAVANGO EAST

BILL OF QUANTITIES:

Procurement Reference Number: _____

The quantities shown below are approximate, and subject to re-measurement for payment purposes.

Item No	Brief Description of Works	Quantity	Unit of Measure	Unit Price N$	Total Price N$
1.0	**PRELIMINARIES AND GENERALS**				
1.1	Contractor's site facilities, Electricity, Water and Telephone.	Sum	1		
2.0	**EARTHWORK** **EXCAVATION IN EARTH EXCEDING 1M DEEP**				
2.1	Trenches and hole	8.13	M^3		
3.0	**EARTH FILLING OBTAINT FROM THE EXCAVTIONS AND/OR PRESCRIBED STOCK PILES ON SITE COMPACTED TO 93% AASHTO density**				
3.1	Backfilling to trenches, holes etc.	2.00	M^3		
4.0	**25MPa/19mm concrete**				
4.1	Footings and bases.	1.07	M^3		
4.2	Surface beds, Slab, ramps, etc. cast in panels	0.50	M^3		
5.0	**REINFORCEMENT**				
5.1	**Fabric reinforcement** Type 888 fabric reinforcement in concrete slab	3.00	M^2		
6.0	**ROUGH FORMWORK TO SIDE (FOOTING)**				
6.1	Rectangular or square footings.	4.20	M^2		

7.0 7.1	**Brickwork in Foundation (Underground Structure)** **Brick work of 14 MPa cement bricks in class 1 mortar** One brick walls on foundation wall	9.54	M^2		
8.0 8.1	**GALVANISED BRICK REINFORCEMMENT** 150mm wide reinforcement built in horizontally (extra for brick lintels or bands)	73.00	M		
9.0	**DAMP- PROOFING 372 MICRO EMBOSSED DAMP COASRE**				
9.1	Under surface beds, aprons, etc.	3.5	M^2		
9.2	One layer of 372 micro embossed damp proof course In walls	2	M^2		
10.0	**Roof covering**				
	0.5mm 'IBR' profile full hard galvanised (z275spelter) Steel troughed roofing with 0.6mm galvanised sheet steel accessories fixed in strict accordance with the manufacture's instruction				
10.1	Roofing sheeting Cover to sides (See Drawing)	4 18	M^2 M^2		
11.1	**WELDED STEEL ROOF TRUSSES AND DOOR** **SINGLE PITCH ROOF TRUSSES WITH A PITCH NOT EXCEEDING 10^0**				
11.1	Single truss with a clear span of not exceeding 2m and an overhang of not exceeding 900mm at eaves (See drawings) Rectangular tube 80x40x3mm	5.43	Kg		
11.2 11.3 11.4	**Purlins and braces** Square tube 40x40x3mm **Columns** Square tube 80x80x3mm **Welded Door and frame.**	85.2 58.8	Kg Kg		

	40x40x3 Mild steel hollow section door frame and door post with two lugs sized 40x40x3mm long welded on and, Including two 100mm weld-on type hinges.	49.7	Kg		
12.0	**Base plates, bolts/nails to poles, etc**				
12.1	M12 " Rawl" U-bolt 100mm long 12mm U-shape anchor bolt threaded ends girth cast into concrete slab (See drawings)	20.00	No		
12.2	250mm x 250mm x 8mm base plate with a Hot Rolled Round Tube Diameter 88mm with 2mm thickness. 150 mm high. Welded on top of the base plate. (See Drawings for details)	4.00	kg		
13.0	**Plastering**				
13.1	**Internal plaster** On walls (Pit Latrine)	12.20	M^2		
14.0	**Plumbing and drainage (dry toilet)**				
14.1	**uPVC class 9 heavy duty pipes** 110mm pipes laid vertically, for ventilation purpose.	3.00	M		
14.2	Two-way vent valve 110mm	1.00	No		
14.3	**Toilet Pot – Dry Pit latrine** Inclunding installation	1.00	No		
16	**Ironmongery** **Mortice locks**				
16.1	**Barrel bolt** 100mm brass barrel bolt and keep	1.00	No		
16.2	**Padlock** 55mm solid hardened 6-pin steel padlock	1.00	No		
17	**Gloss paint black**	1.04	M^2		

TOTAL VALUE OF BUILDING ITEMS	
CONTIGENCY 10%	
VAT @ 15 %	

GRAND TOTAL	

Priced Activity Schedule Authorised by:

Name:		Signature:	
Position:		Date:	
Authorised for and on behalf of:		Company	

SECTION V: SPECIFICATIONS AND COMPLIANCE SHEET

Procurement Reference Number: ***W/RFQ/KERC-RS/26/2025-2026***

[Bidders should complete columns C and D with the specification of the goods offered. Also state "comply" or "not comply" and give details of any non-compliance/deviation to the specification required. Attach detailed technical literature if required. Authorise the specification offered in the signature block below.]

Item No	Technical Specification Required	Compliance of Specification Offered	Details of Non-Compliance/ Deviation (if applicable)
*A**	*B**	*C*	*D*
	Please refer to Sections III and IV above		

Specifications and Compliance Sheet Authorised by:

Name:		Signature:	
Position:		Date:	

Authorised for and on behalf of:	Company	

SECTION VI: GENERAL CONDITIONS OF CONTRACT AND CONTRACT AGREEMENT

Any resulting contract shall be placed by means of a Purchase Order/Letter of Acceptance and shall be subject to the General Conditions of Contract (GCC) for the Procurement of Works - Ref. **W/GCC** on the website of the Public Entity: https://mof.gov.na/standard-bidding-documents except where modified by the Special Conditions below.

SECTION VII: SPECIAL CONDITIONS OF CONTRACT

Procurement Reference Number: ***W/RFQ/KERC-RS/26/2025-2026***

The clause numbers given in the first column correspond to the relevant clause number of the General Conditions of Contract.

Subject and GCC clause reference	Special Conditions
Employer GCC 1.1 (r)	Kavango East Regional Council
Intended Completion Date GCC	Ninety (90) days from date of award
Project Manager GCC 1.1 (y)	The Chief Regional Officer
Site GCC 1.1(aa)	Ndonga-Linena constituency; Kavango East region
Start Date GCC 1.1 (dd)	Within 7 days after issue of the Purchase Order Agreement
The Works GCC 1.1 (hh)	The Works consist of: Construction of Nineteen (19) Ventilated Improved Pit latrine (VIP) toilets
Interpretation GCC 2.2	The project will be completed in the following sections: _____
Interpretation GCC2.3	The following additional documents shall form part of the contract: _____
Language and Law GCC 3.1	The language of the contract is English The law of Namibia applies to the contract
Delegation GCC 5.1	The Project Manager May Delegate his/her duties.

Subject and GCC clause reference	Special Conditions
Notices GCC 6	Any notice shall be sent to the following addresses: Employer: **Contact: Mr J.M. Kangumbe** **Kavango East Regional Council** **Private Bag 2124** **Maria Mwengere Street,** **Rundu** **Namibia** For the Contractor, the address and contact name shall be as given on the first page of the Purchase Order/ Letter of Acceptance and the contact name shall be: _____ _____
Procedure for Disputes GCC 24	No adjudicator shall be appointed under the contract and arbitration shall not apply. If any dispute arises between the Employer and Contractor in connection with or arising out of the Contract, the parties shall seek to resolve any such dispute by amicable agreement. If the parties fail to resolve such disputes by amicable agreement, within 14 days after one party has notified the other in writing of the dispute, then the dispute shall be referred to court by either party.
Program GCC 25.1	The Contractor shall submit for approval a Program for the Works within 14 days from the date of the Letter of Acceptance or issue of Purchase Order Agreement.
GCC 25.3	Program updates shall be required
Defects Liability Period GCC 33.1	The Defects Liability Period is: 12 months
Payment Certificates GCC 39.7	A single statement of the estimated value shall be submitted on completion of the Works. The Project Manager shall check the statement and certify the amount to be paid to the Contractor.
Payments GCC 40	The amount certified by the Project Manager shall be paid in full within 30 business days of receipt by the Employer of an invoice, supported by: (a) The payment certificate (b) A certificate of Completion of Works
Adverse Weather Conditions GCC 41.1 (1)	*Namibia Meteorological Services* to define adverse weather conditions.

Subject and GCC clause reference	Special Conditions
Price Adjustment GCC 44	The contract is not subject to price adjustment.
Retention GCC 45	(i) 10% of the amount shall be retained from any payment. Half of the retention money will be released after formal taking over of the Works and the remaining shall be released after the defect Liability Period subject to the Contractor making good all defects.
Advance Payment GCC 48.1	(i) No advance payment shall be made
Performance Security GCC 49.1	No performance security is required
Operating and Maintenance Manuals GCC 56.1	"As built" drawings or operating and maintenance manuals are required
Payment upon termination GCC 59.1	The percentage to apply to the value of the work not completed, representing the Employer's additional cost for completing the Works, is: 10% to the value of works

SCHEDULE 3

QUOTATION CHECKLIST SCHEDULE

Procurement Reference No.: ***W/RFQ/KERC-RS/24/2025-26***

Description	Attached	Not Attached
Quotation Letter		
Priced Activity Schedules		
Specification and Compliance Sheet		
Valid copy of Company Registration Certificate		
Original valid or certified copy of Good Standing Tax Certificate		
Original valid or certified copy of Good standing Social Security Certificate		
Valid certified copy of Good Standing Certificate from BIPA		
Valid certified copy of Affirmative Action Compliance Certificate		
Valid SME Certificate		
Signed Bid Securing Declaration		
Practical Completion Certificate		
Certified Identity Document (s) of the Company Owner (s)		
Work Program indicating duration and deliverable		

Disclaimer: *The list defined above is meant to assist the Bidder in submitting the relevant documents and shall not be a ground for the bidder to justify its non-submission of major documents for its bid to be responsive. The onus remains on the Bidder to ascertain that it has submitted all the documents that have been requested and are needed for its submission to be complete and responsive.*

ANNEXURES

Part 2. Drawing. Plan A - 001. FLOOR PLAN

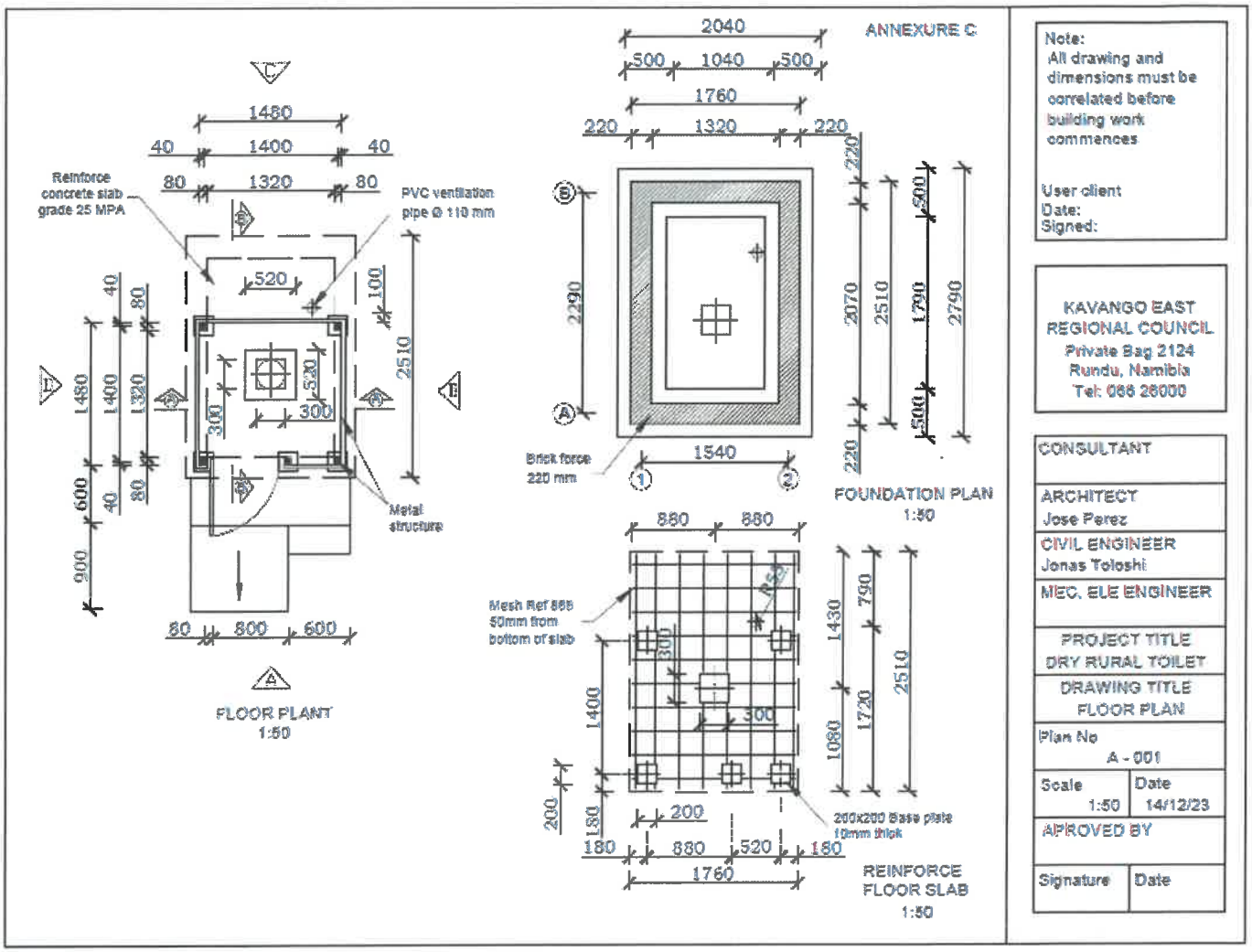

Part 2. Drawing. Plan A - 002. STRUCTURE VIEW

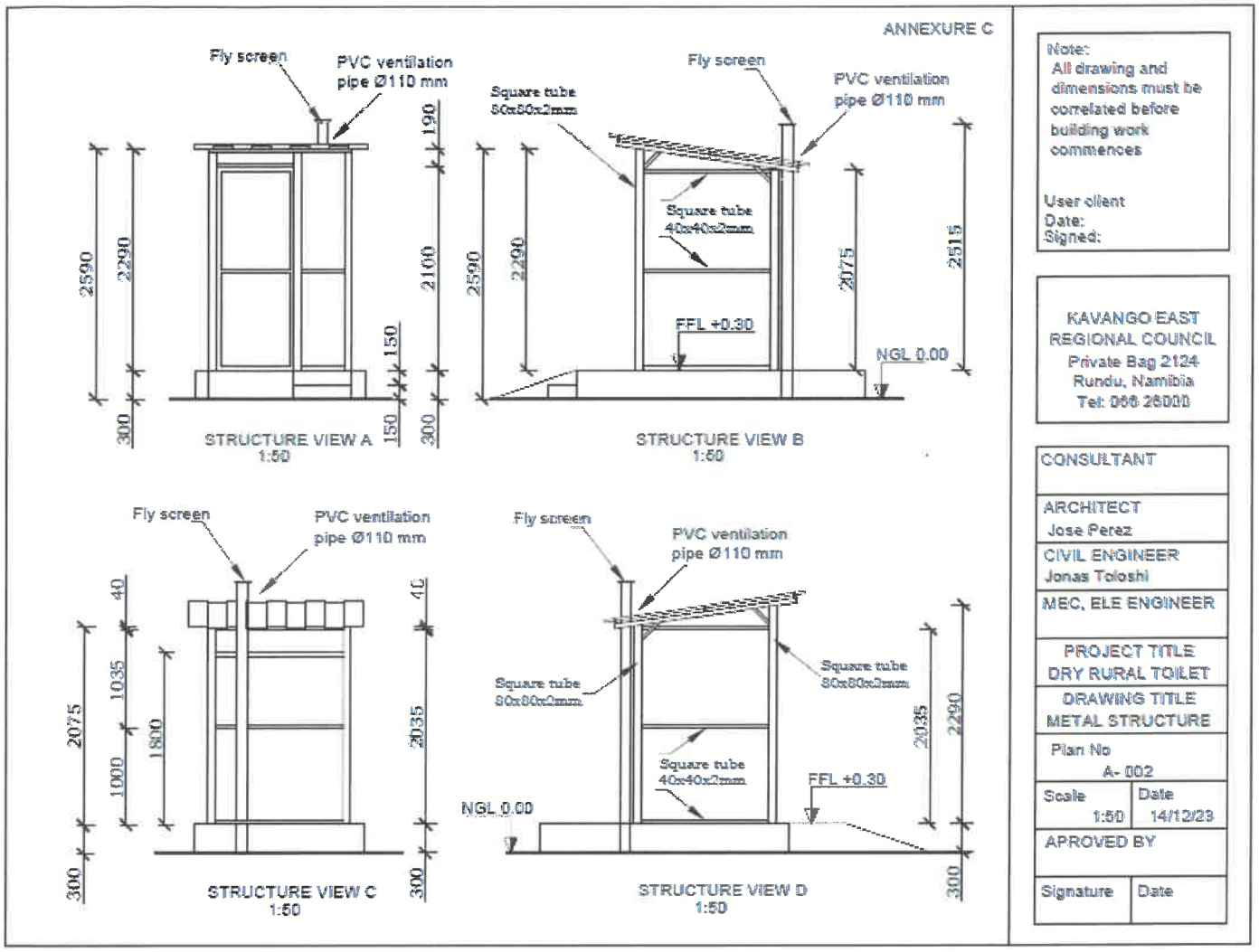

Part 2. Drawing. Plan A - 003. ELEVATIONS

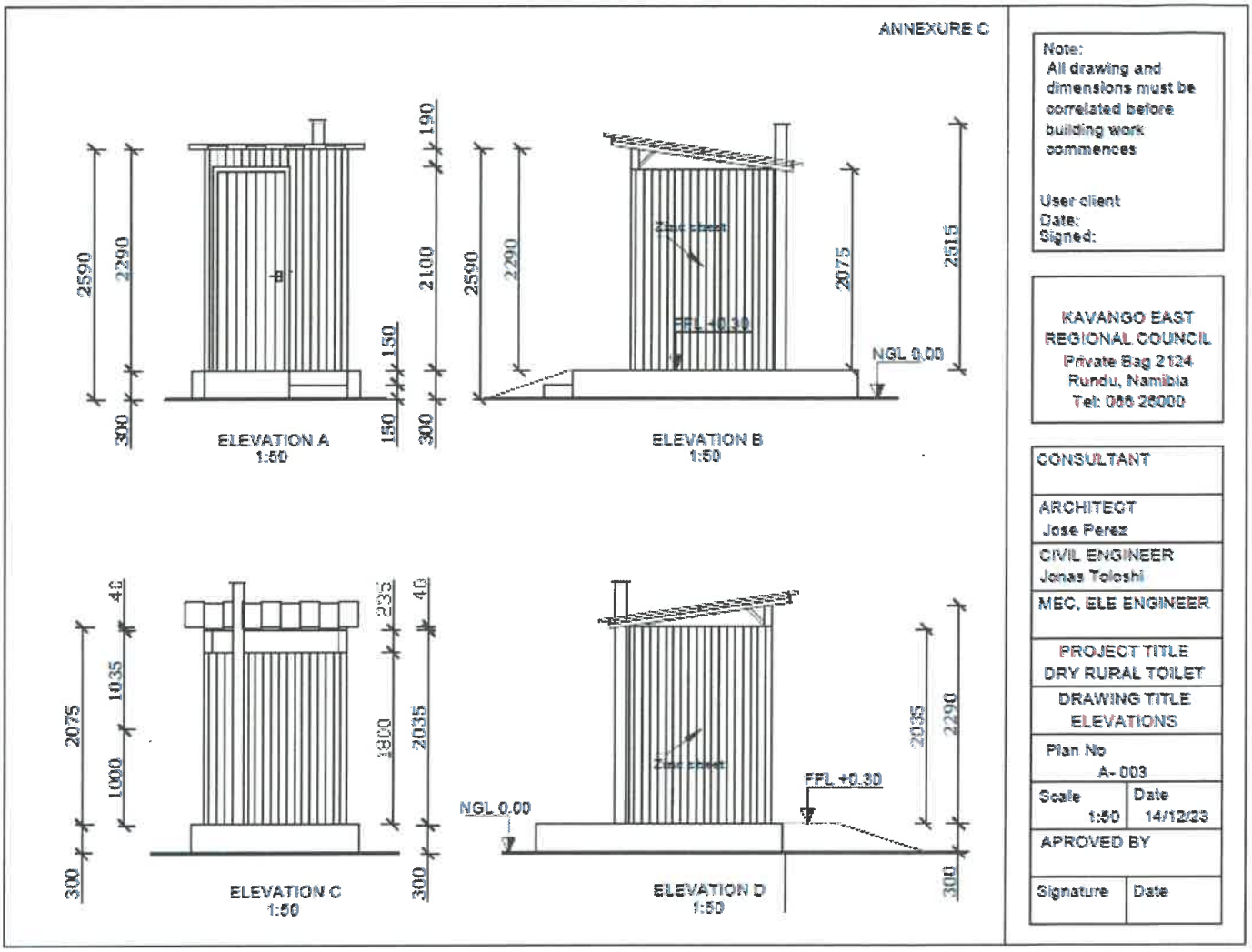

Part 2. Drawing. Plan S - 001. SECTIONS DETAILS

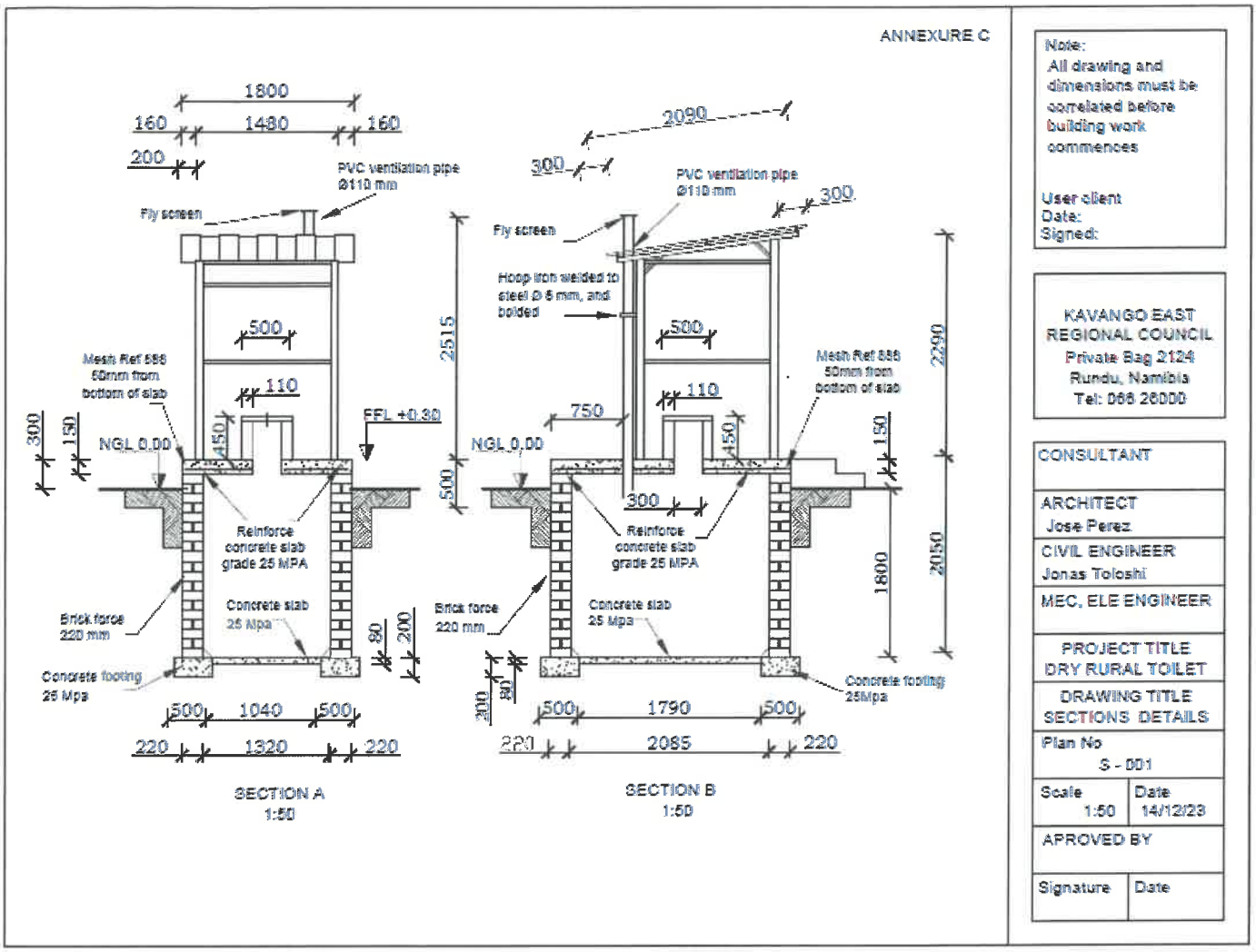

Part 2. Drawing. Plan S - 002. STRUCTURE DETAILS

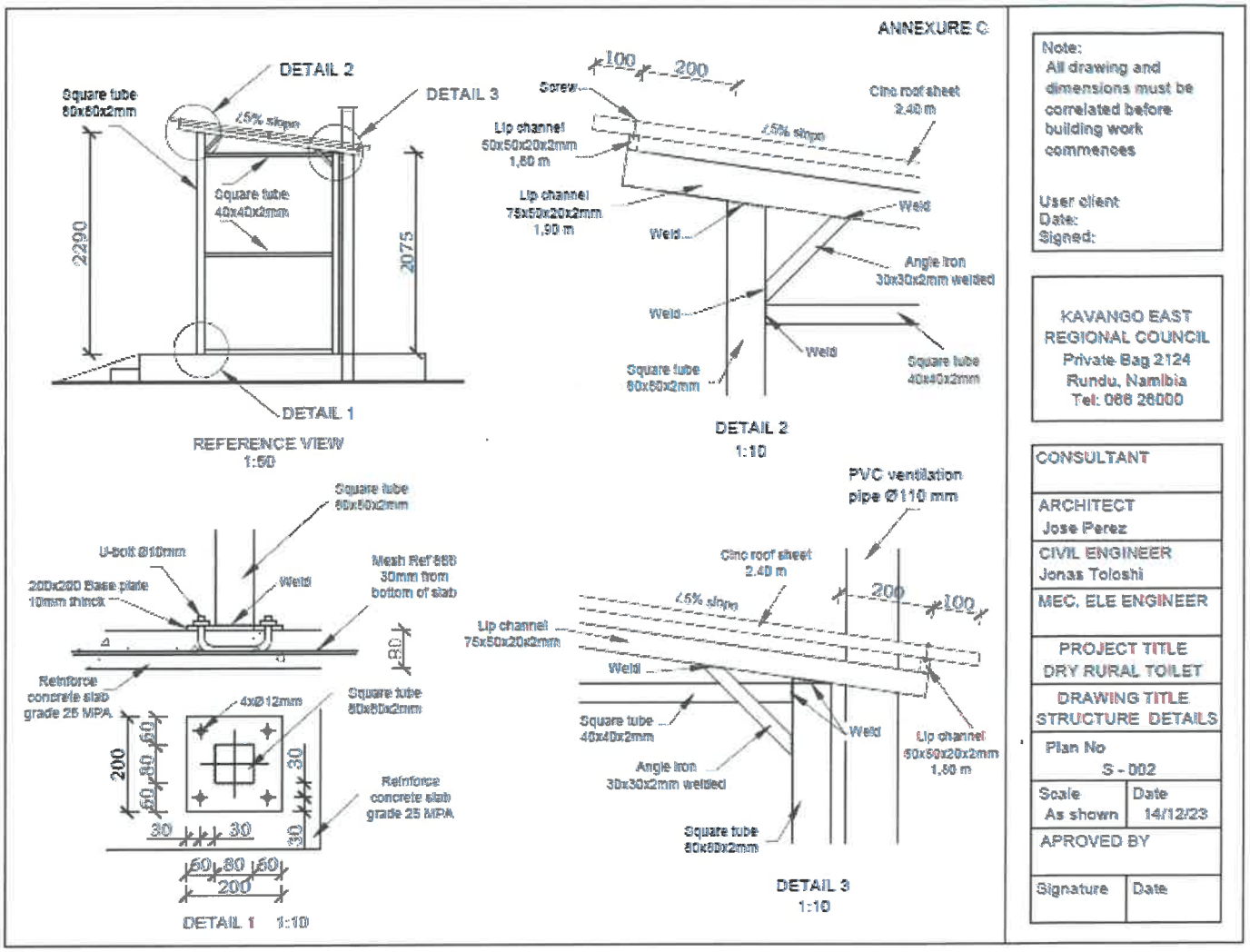
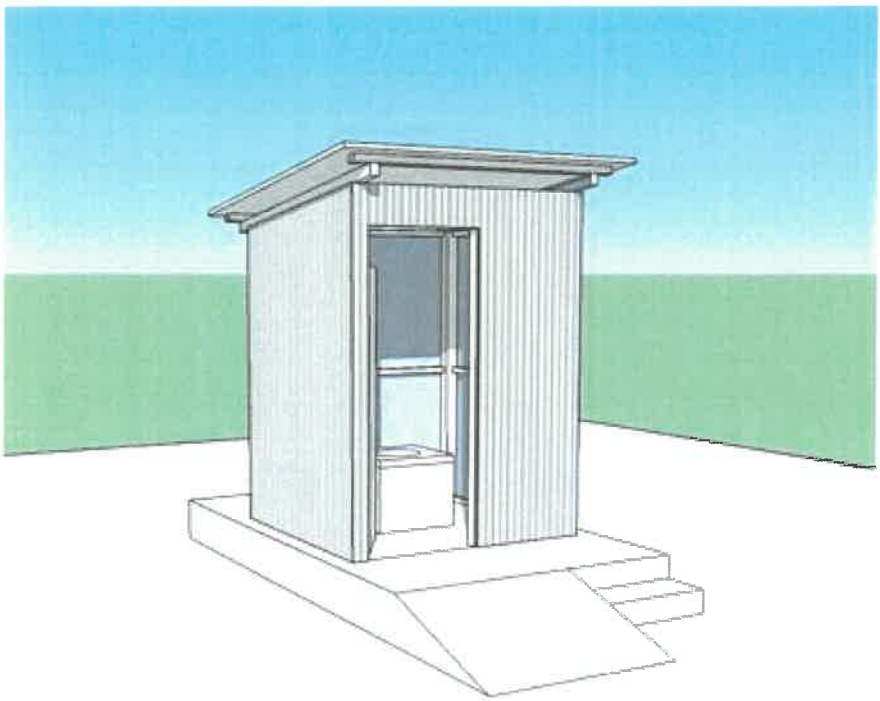
2.5. 3D View.